SERVICE PARTS LIST

BULLETIN NO.
54-06-0359

SPECIFY CATALOG NO. AND SERIAL NO. WHEN ORDERING PARTS			REVISED BULLETIN	DATE
1/4" T.S.C. REV. HOLE-SHOOTER			54-06-0358	Dec. '99
CATALOG NO. 0102-1	STARTING SERIAL NO.	**428B**	WIRING INSTRUCTION **58-01-1591**	

EXAMPLE:
00 | 0
Component Parts (Small #)
Are Included When Ordering
The Assembly (Large #).

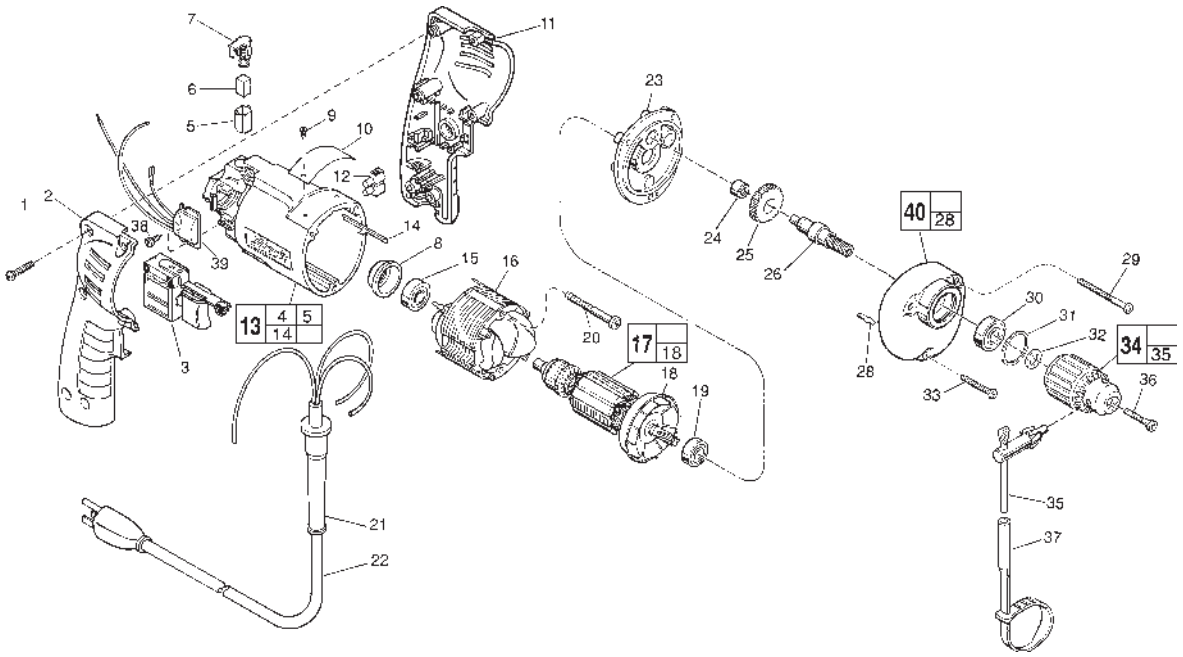

FIG.	PART NO.	DESCRIPTION OF PART	NO. REQ.
1	06-82-7284	8-16 x 3/4" Pan Hd. Slt. Plast. T-20	(6)
2	31-44-1745	Right Handle Half	(1)
3	23-66-2145	Speed Control Switch	(1)
4	23-94-6225	Ground Wire Assembly (Not Shown)	(1)
5	22-20-0830	Brush Tube	(2)
6	22-16-0275	Carbon Brush	(2)
7	23-52-1560	Brush Spring Assembly	(2)
8	22-72-0100	Bearing Cup	(1)
★ 9	06-72-1720	Nameplate Rivet	(2)
10	12-99-0850	Service Nameplate	(1)
11	31-44-1740	Left Handle Half	(1)
12	22-56-0456	Terminal Block	(1)
★ 13	14-38-0601	Motor Housing Assembly	(1)
14	44-60-0530	Ground Pin	(1)
15	02-04-0645	Ball Bearing	(1)
16	18-11-0060	120 Volt Field	(1)
17	16-10-0440	120 Volt Armature	(1)
18	22-84-0760	Fan Assembly	(1)
19	02-04-0851	Ball Bearing	(1)
20	06-82-7393	7-18 x 2" Pan Hd. Slt. Plast. T-20	(2)
21	44-76-0210	Cord Protector	(1)
22	22-64-1120	Cord Set	(1)
23	28-28-1950	Diaphragm	(1)
24	02-50-1620	Needle Bearing	(1)
25	32-75-3260	Spindle Gear	(1)
26	38-50-5670	Spindle	(1)
28	06-65-0825	1/8 x 1/2" Groove Pin 5	(1)
29	06-82-7344	7-18 x 1-1/2" Pan Hd. Slt. Plast. T-20	(2)

FIG.	PART NO.	DESCRIPTION OF PART	NO. REQ.
30	02-04-1020	Ball Bearing	(1)
31	34-80-1400	Retaining Ring	(1)
32	45-88-7940	Chuck Washer	(1)
33	06-82-7308	7-18 x 1-1/8" Pan Hd. Slt. Plast. T-20	(1)
34	48-66-0070	1/4" Chuck	(1)
35	48-66-3200	Chuck Key	(1)
36	45-04-0750	Chuck Screw-L.H. Thread	(1)
37	48-66-4080	Key Holder	(1)
38	06-82-7212	4-20 x 1/4" Pan Hd. Plastite T-10	(1)
★ 39	14-20-0750	Remote Electronic Assembly	(1)
★ 40	14-20-0750	Gear Case Assembly	(1)

FIG.	LUBRICATION
40	1-1/8 Oz. Type "E" Grease, No. 49-08-4122. Place In Center Of Gear Case.

FIG.	NOTES
1	Torque to 18-28 In./Lbs.
20, 29, 33	Torque to 15-20 In./Lbs.
36	Torque to 30-50 In./Lbs.
38	Torque to 3-5 In./Lbs.
8	Place in motor housing before inserting armature.
24	Press flush to casting surface.
15,19	Seal towards armature.
30	Seal towards chuck.

MILWAUKEE ELECTRIC TOOL CORPORATION
13135 W. LISBON RD., BROOKFIELD, WI 53005

Drwg. 1