SERVICE PARTS LIST

BULLETIN NO. 54-06-2525

SPECIFY CATALOG NO. AND SERIAL NO. WHEN ORDERING PARTS		REVISED BULLETIN	DATE
18 VOLT 1/2" POWER PLUS DRIVER DRILL			Mar. 2000
CATALOG NO. 0522-20	STARTING SERIAL NO. **952A**	WIRING INSTRUCTION **See Inset**	

00 | 0

EXAMPLE:
Component Parts (Small #) Are Included When Ordering The Assembly (Large #).

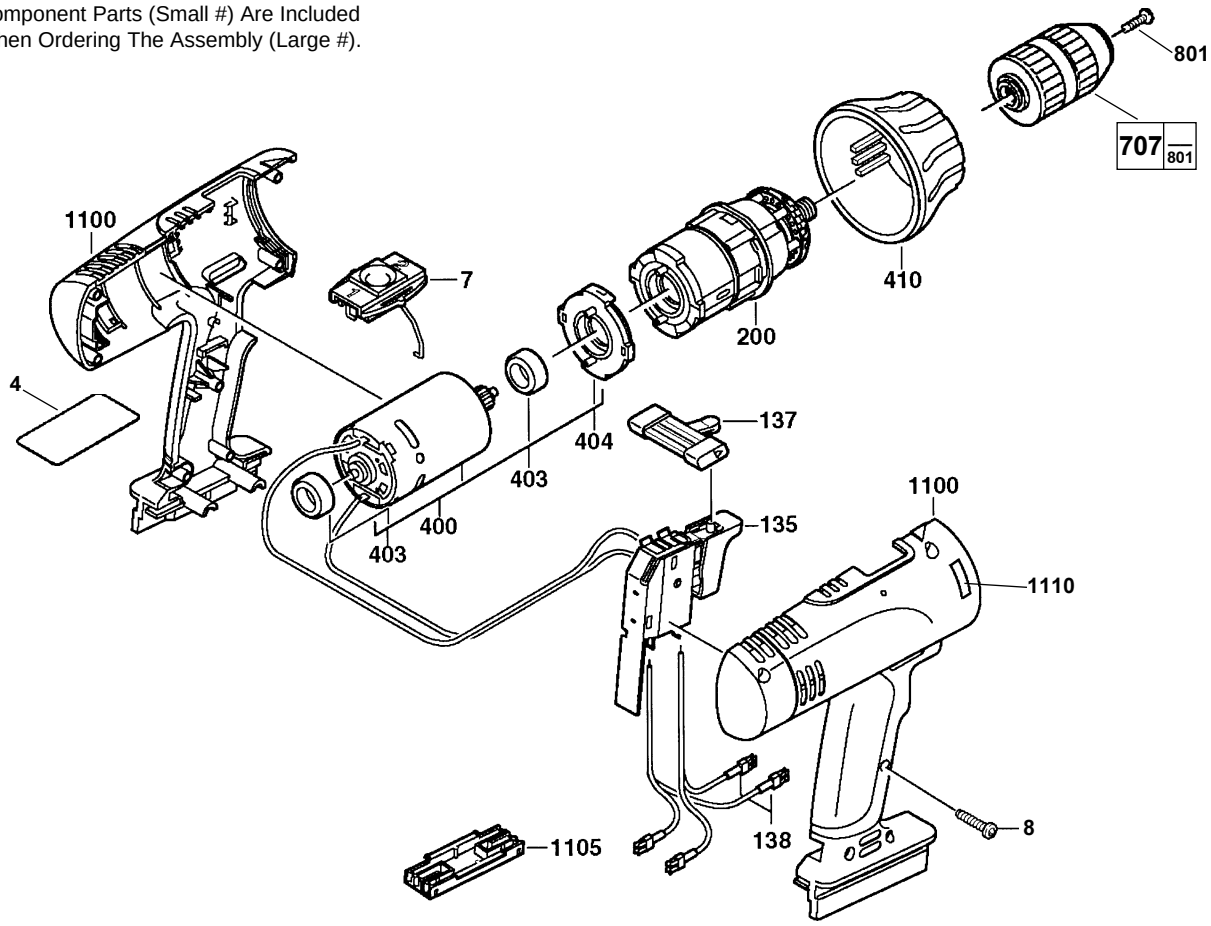

NOTE:
Proper polarity in terminal block requires leads to be crossed as illustrated.

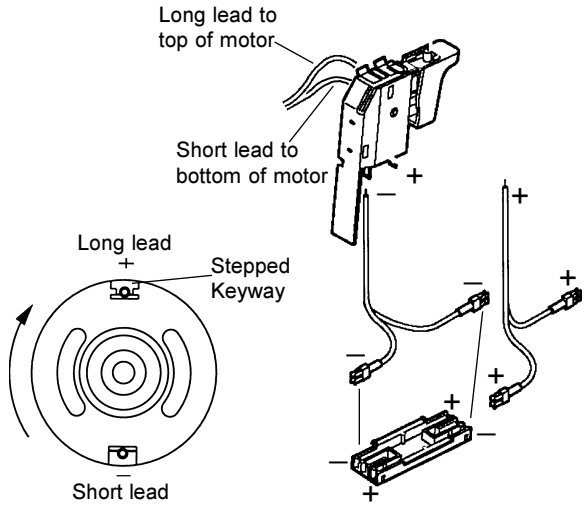

WARNING!
Switch polarity sensitive if wired incorrectly with terminal block (1105). Switch will be damaged and destroyed.

FIG.	PART NO.	DESCRIPTION OF PART	QTY
4	12-20-0325	Service Nameplate	(1)
7	45-24-0090	Slide High / Low	(1)
8	06-82-7236	Screw	(7)
135	23-66-0470	Switch	(1)
137	45-24-0500	Reversing Shuttle	(1)
138	23-94-1170	Lead Wire Assembly	(2)
200	14-29-0110	Gearbox Assembly	(1)
400	23-30-0370	Motor	(1)
403	45-22-0340	Rubber Sleeve	(2)
404	44-66-5925	Motor Mount Plate	(1)
410	43-76-0670	Torque Selector Ring	(1)
707	48-66-0365	Keyless Chuck (Plastic)	(1)
★707	48-66-1375	Keyless Chuck (All Metal)	(1)
----	----------	Battery Pack (Not Shown)	(1)
★801	06-81-2925	Chuck Screw	(1)
1100	31-50-0270	Housing Assembly	(1)
1105	22-56-0200	Terminal Block	(1)
1110	10-15-0190	Warning Label	(1)

MILWAUKEE ELECTRIC TOOL CORPORATION
13135 W. Lisbon Road, Brookfield, WI 53005

Drwg. 4