SERVICE PARTS LIST

BUL. 54-22-3102

REVISED BUL 675-3 | DATE FEB. '68

WIRING INSTR.

5" GRINDER

MODEL NO. V-591 Starting Serial No. **75-1176**

Both Model and Serial No. must be furnished to obtain correct parts.

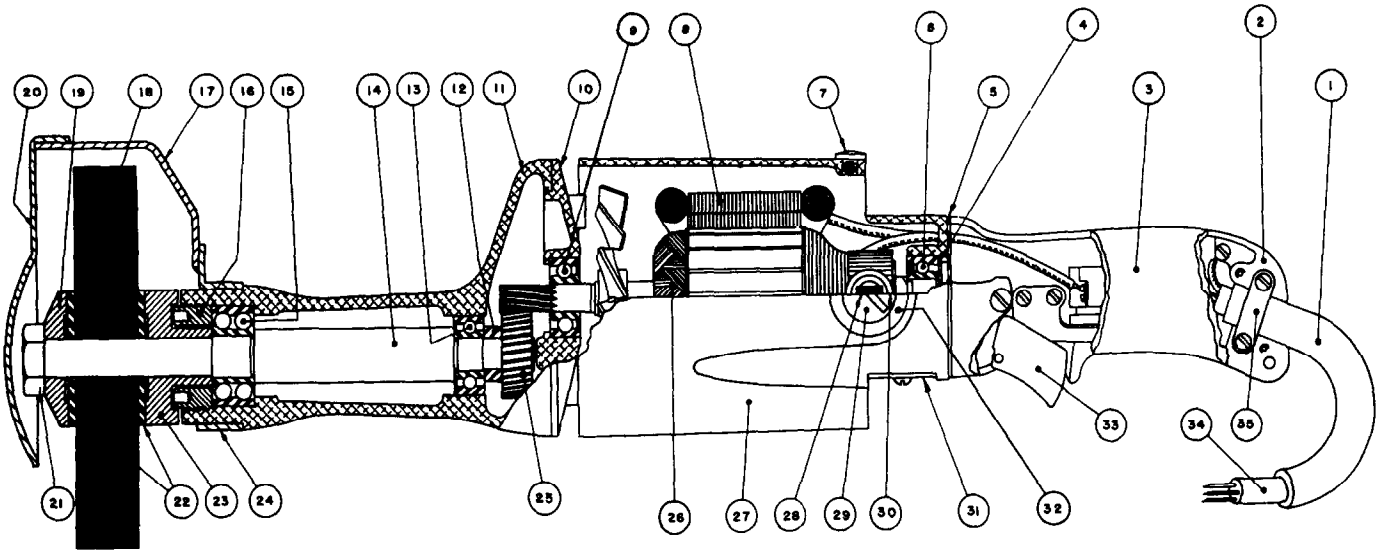

ILLUSTRATED PARTS

FIG.	PART NO.	DESCRIPTION OF PART	PRICE
1	6UPV-28	Cord Protector Tube	$
2	7UPV1-1	Handle (Switch Mounting Side)	
3	7UPV1-2	Handle (Switch Cover Side)	
4	6UPV1-9	Body End Play Disc	
5	6UPV1-3	Handle Insulator	
6	WC8500	Armature Ball Brg. (Comm. End)	
7	7UPV1-7	Drive Screw Tool Rest Button	
8	56V-700	Field Assembly	
9	WC8011	Armature Ball Brg. (Pinion End)	
10	56V-2	Diaphragm	
11	4V-3	Spindle Housing	
12	56V8-4	Spindle Gear Spacer	
13	NH6015	Spindle Ball Brg. (Inner)	
14	95V-8B	Spindle	
15	ND5503	Spindle Ball Brg. (Outer)	
16	96V8-9B	Bearing Lock Nut	
17	95V-900	5" Guard Assembly	
18	5" Dia.x5/8"	Hole Grinding Wheel (Specify Grit)	
19	56V8-6	Outer Wheel Flange	$
20	See Fig. 17	Sold only as an Assembly	
21	5/8"-11 Thr'd	Spindle Nut	
22	56V8-8	Rubber Flange Washers (2)	
23	56V8-7	Inner Wheel Flange	
24	See Fig. 17	Sold only as an Assembly	
25	95V-11B	Spindle Gear	
26	56V-600A	Armature Assembly	
27	7UPV-1A	Motor Housing	
28	88D-370A	Carbon Brush Assemblies(per set 2)	
29	7UPV-40	Brush Ret. Cap. Assy. (per set 2)	
30	7UPV-320	Brush Holder Assembly (2) ea.	
31	7UPV1-6	Commutator Cover Plate	
32	7UPV1-3	Brush Holder Bushing Steel (2)	
33	8909K184	Switch Assembly	
34	S#16-3	Cord (3-wire) per foot	
35	7UPV1-5	Cord Clamp Strap	

PARTS NOT SHOWN

SIZE OR PART NO.	DESCRIPTION OF PART	PRICE
9P1-1	Tool Rest	$
3 Prong	Adapter Plug	
V-591	Name Plate	
3 Prong	Attachment Plug	
7UPV-34	Insulating Washers (2)	
#8-32x7/16" Fil. Hd.	Cord Clamp Strap Screws (2)	
#10-24x1-3/8" Fil. Hd.	Spindle Housing Screws (4)	
#8-32x1 Oval Hd.	Handle Cover Screw	
#8-32x7/8" Oval Hd.	Handle Cover Screws (2)	
#12-24x1" Fil. Hd.	Switch Handle Screws (4)	$
1/4"-20x3/8" Hd'less	Brush Holder Set Screws (2)	
#8-32x2-1/4" Rd. Hd.	Field Screws (2)	
#6-32x1/4" Rd. Hd.	Ground Wire Screw (Brass)	
#8-32x1/4" Rd. Hd.	Switch Mounting Screws (2)	
#4-36 Rd. Hd.	Name Plate Screws (2)	
#8, #10 or #12	Kantlink Lock Washers (10)	
#6-32x1/4" Rd. Hd.	Comm. Cover Screws (2)	
#10-24x1/2" Fil. Hd.	Sem. Tool Rest Screws (2)	

Numbers in brackets indicate number required.
Parts are individually priced.
Prices are subject to change without notice.

Wire wheel brushes, grinding wheels and cloth buffing wheels greatly increase the scope of your grinder's versatility. A bench base is available for mounting the grinder which offers all the advantages of a bench grinder. Make it a point to see these attachments at your MILWAUKEE jobber or write factory direct for complete information.

MILWAUKEE ELECTRIC TOOL CORP. 13135 West Lisbon Road • Brookfield, Wisconsin 53005