# SERVICE PARTS LIST

BULLETIN NO.
54-24-0352

SPECIFY CATALOG NO. AND SERIAL NO. WHEN ORDERING PARTS

## 1-1/2" VARIABLE SPEED ROTARY HAMMER

| CATALOG NO. 5352 | STARTING SERIAL NO. 779A | REVISED BULLETIN 54-24-0351 | DATE Sept. '94 |
|---|---|---|---|
| | | WIRING INSTRUCTION 58-01-1230 | |

**EXAMPLE:**
00 | 0 Component Parts (Small #) Are Included When Ordering The Assembly (Large #).

**DO NOT WASH OR DEGREASE CRANK ASSEMBLY**

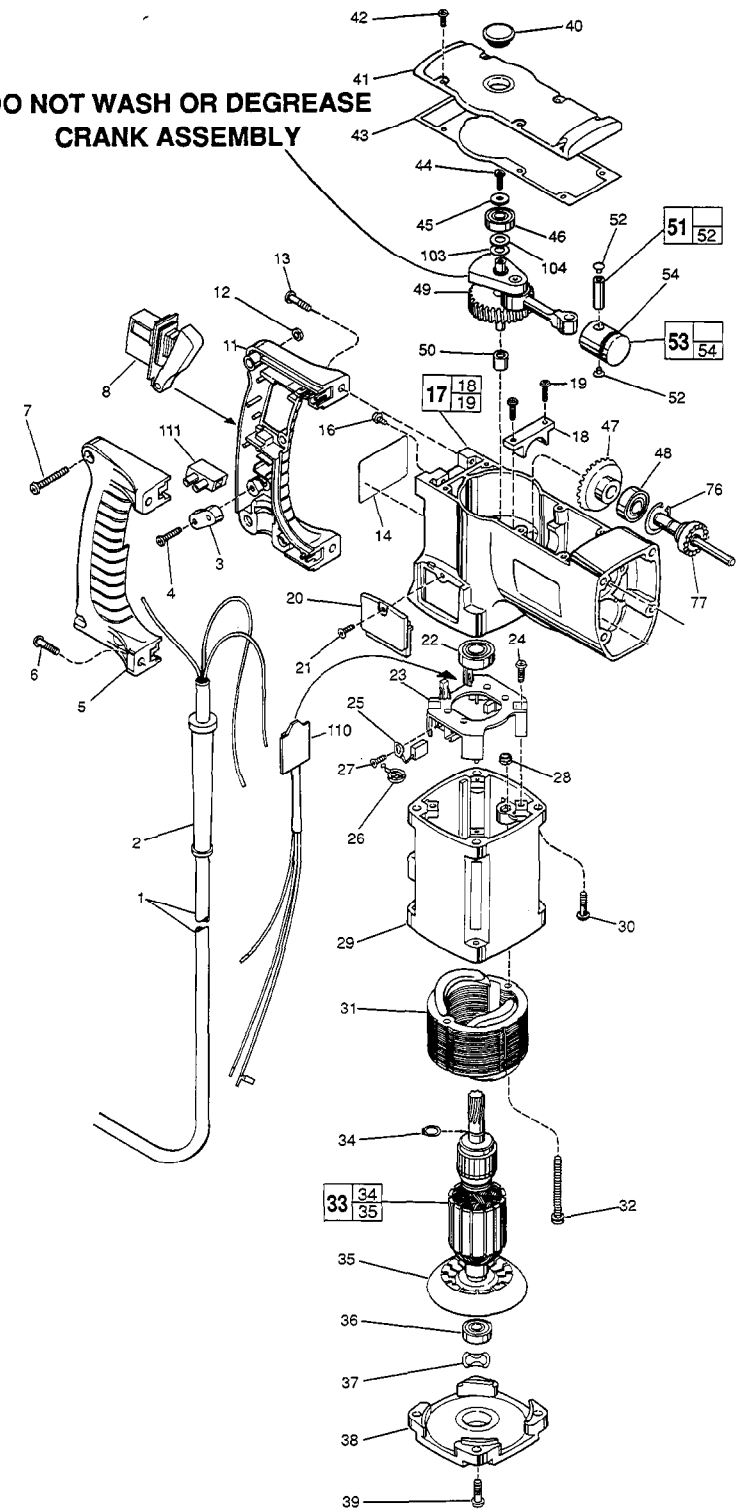


| FIG. | PART NO. | DESCRIPTION OF PART | NO. REQ. |
|---|---|---|---|
| 1 | 22-64-0121 | Cord Set | (1) |
| 2 | 44-76-0050 | Cord Protector | (1) |
| 3 | 31-17-0180 | Cord Clamp | (1) |
| 4 | 05-78-0571 | M4.55 x 1.59 x 19 Pan Hd. Screw | (2) |
| 5 | 31-44-1620 | Right Handle Half | (1) |
| 6 | 05-78-0570 | M4.55 x 1.59 x 16 Pan Hd. Screw | (2) |
| 7 | 05-81-0650 | M5 x .8 x 25 Pan Hd. Screw | (3) |
| 8 | 23-66-1930 | Switch | (1) |
| 11 | 31-44-1610 | Left Handle Half | (1) |
| 12 | 05-55-0610 | M5 x .8 Hex Nut | (3) |
| 13 | 05-78-0665 | M5 x .8 x 20 Pan Hd. Screw | (2) |
| ★ 14 | 12-20-0710 | Service Nameplate Kit | (1) |
| ★ 16 | 05-88-8300 | M4 x .7 x 10 Pan Hd. T-20 Ground Sc. | (1) |
| 17 | 28-14-2182 | Crankcase | (1) |
| 18 | ———— | Bearing Cap | (1) |
| 19 | 05-78-0460 | M4 x .7 x 16 Pan Hd. Screw | (2) |
| 20 | 31-15-0250 | Brush Cover | (2) |
| 21 | 05-78-0440 | M4 x .7 x 10 Pan Hd. Screw | (2) |
| 22 | 02-04-1203 | Ball Bearing | (1) |
| ★ 23 | 22-22-1450 | Brush Carrier Assembly | (1) |
| 24 | 05-78-0340 | M3.63 x 1.34 x 10 Pan Hd. Screw | (2) |
| 25 | 22-18-0780 | Carbon Brush (2) Kit | (1) |
| 26 | 23-52-1550 | Brush Spring | (2) |
| 27 | 05-78-0405 | M4 x .7 x 10 Pan Hd. Screw | (2) |
| 28 | 06-57-3005 | 10-32 Locking Hex Nut | (2) |
| 29 | 31-50-0940 | Motor Housing | (1) |
| 30 | 05-74-0515 | M5 x .8 x 20 Socket Hd. Sems | (4) |
| 31 | 18-50-0151 | 120 Volt Field | (1) |
| 32 | 06-81-7470 | 10-32 x 1-7/8 Pan Hd. Sems | (2) |
| 33 | 16-50-0150 | 120 Volt Armature | (1) |
| 34 | 34-60-0950 | Retaining Ring | (1) |
| 35 | 22-84-0710 | Fan | (1) |
| 36 | 02-04-0850 | Ball Bearing | (1) |
| 37 | 45-88-0577 | Wave Washer | (1) |
| 38 | 31-15-0270 | Motor Housing Cover | (1) |
| 39 | 05-78-0570 | M4.55 x 1.59 x 16 Pan Hd. Screw | (4) |
| 40 | 31-12-0220● | Cover Cap | (1) |
| 41 | 28-20-1311 | Crank Case Cover | (1) |
| 42 | 05-78-0460 | M4 x .7 x 10 Pan Hd. Screw | (6) |
| 43 | 43-44-0650● | Gasket | (1) |
| 44 | 05-78-0440 | M4 x .7 x 10 Pan Hd. Screw | (1) |
| 45 | 45-88-0920 | Flat Washer - Spring Steel | (1) |
| 46 | 02-04-0850 | Ball Bearing | (1) |
| 47 | 32-05-1250 | Bevel Gear | (1) |
| 48 | 02-04-1022 | Ball Bearing | (1) |
| 49 | 14-09-0105 | Crank Assembly | (1) |
| 50 | 02-50-1645 | Needle Bearing | (1) |
| 51 | 44-60-0790 | Piston Pin Assembly | (1) |
| 52 | 42-42-0240 | Button | (2) |
| 53 | 14-46-5000 | Piston Assembly | (1) |
| 54 | 34-40-4090● | O-Ring | (1) |
| 76 | 34-80-2006 | Internal Retaining Ring | (1) |
| 77 | 36-14-0700 | Clutch Shaft | (1) |
| 103 | ———— | .003 Shim Washer | (1) |
| 104 | ———— | .008 Shim Washer | (1) |
| 110 | 14-20-0380 | Remote Module Assembly | (1) |
| 111 | 22-56-0480 | Terminal Block | (1) |
| | 10-98-6850 | Product Label | (2) |

● 14-46-1193 1-1/2" HAMMER SERVICE KIT
THIS KIT INCLUDES:

| | | |
|---|---|---|
| 1 | 31-12-0220 | Cover Cap |
| 1 | 34-40-4085 | O-Ring |
| 2 | 34-40-4090 | O-Ring |
| 1 | 34-40-4095 | O-Ring |
| 1 | 34-40-4100 | O-Ring |
| 1 | 43-44-0650 | Gasket |
| 1 | 43-44-0670 | Gasket |
| 1 | 43-44-0920 | Gasket |
| 1 | 45-06-0290 | Quad Ring Seal |
| 1 | 49-08-4161 | 5 Oz. Tube "K" Grease |

SEE REVERSE SIDE

MILWAUKEE ELECTRIC TOOL CORPORATION
13135 W. LISBON RD., BROOKFIELD, WI 53005

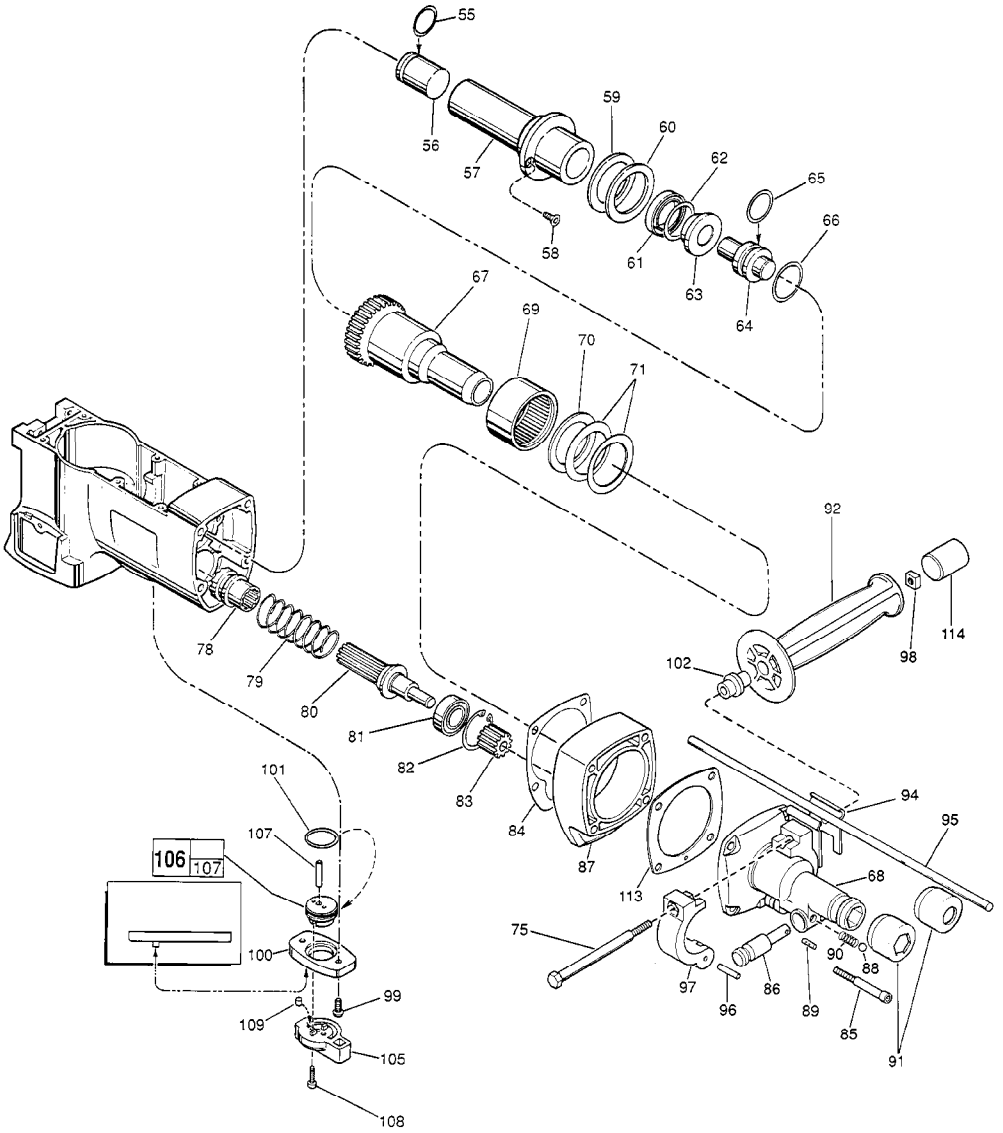


| FIG. | PART NO. | DESCRIPTION OF PART | NO. REQ. |
|---|---|---|---|
| 55 | 34-40-4090 ● | O-Ring | (1) |
| 56 | 44-82-0102 | Ram | (1) |
| 57 | 42-98-0165 | Service Barrel Assembly | (1) |
| 58 | 05-78-0435 | M4 x .7 x 13 Flat Hd. Taptite Screw | (2) |
| 59 | 44-90-0562 | Damping Ring - Plastic | (1) |
| 60 | 45-88-7851 | Thrust Washer - Steel | (1) |
| 61 | 45-88-8015 | Cushion Washer | (1) |
| 62 | 34-40-4085 ● | O-Ring | (1) |
| 63 | 45-88-8020 | Cushion Washer | (1) |
| 64 | 45-56-2551 | Striker | (1) |
| 65 | 34-40-4095 ● | O-Ring | (1) |
| 66 | 34-40-4100 ● | O-Ring | (1) |
| 67 | 38-50-5541 | Spindle | (1) |
| ★68 | 14-52-0010 | Nose Assembly | (1) |
| 69 | 02-50-9976 | Needle Bearing | (1) |
| ★70 | 45-88-0900 | Thrust Washer | (1) |
| 71 | 40-50-7850 | Belleville Spring | (2) |
| ★75 | 06-75-0356 | 5/16 -18 x 4 Hex Hd. Bolt | (1) |
| 78 | 36-14-0710 | Splined Clutch | (1) |
| 79 | 40-50-3250 | Clutch Spring | (1) |
| 80 | 14-08-0125 | Splined Clutch Assembly | (1) |
| 81 | 02-04-1510 | Ball Bearing | (1) |
| 82 | 34-80-2355 | Internal Retaining Ring | (1) |
| 83 | 32-60-2160 | Pinion | (1) |
| 84 | 43-44-0670 ● | Gasket | (1) |
| ★85 | 05-74-0650 | M6 x 1.0 x 50 Socket Hd. Cap Screw | (4) |
| ★86 | 44-20-0222 | Bit Lock | (1) |
| ★87 | 28-14-2220 | Intermediate Housing | (1) |
| ★88 | 02-02-0250 | 1/4" Steel Ball | (1) |
| ★89 | 06-65-0828 | Groove Pin | (1) |

| FIG. | PART NO. | DESCRIPTION OF PART | NO. REQ. |
|---|---|---|---|
| ★90 | 40-50-8420 | Spring | (1) |
| ★91 | 45-06-0540 | Dust Seal - Hex | (1) |
| ★ | 45-06-0550 | Dust Seal - Round | (1) |
| 92 | 43-62-0840 | Side Handle | (1) |
| 94 | 42-68-0390 | Depth Gage Clamp | (2) |
| 95 | 44-94-0165 | Depth Gage Rod | (1) |
| 96 | 06-65-0631 | Groove Pin | (1) |
| 97 | 28-82-0165 | Handle Ring Half | (2) |
| 98 | 06-54-0300 | Square Nut | (1) |
| 99 | 05-78-0440 | M4 x .7 x 10 Pan Hd. Screw | (2) |
| 100 | 44-86-0530 | Shift Lever Retainer | (1) |
| 101 | 34-40-4160 | O-Ring | (1) |
| ★102 | 45-36-1460 | Spacer | (1) |
| 105 | 44-10-0150 | Shift Lever | (1) |
| 106 | 14-14-0152 | Shift Disc Assembly | (1) |
| 107 | ---------- | Dowel Pin | (1) |
| 108 | 05-78-0300 | M3 x .5 x 16MM Socket Hd. Screw | (2) |
| 109 | 45-30-0060 | Retaining Slug | (1) |
| ★113 | 43-44-0920 ● | Gasket | (1) |
| ★114 | 44-68-0560 | Plug-Cap | (1) |

| FIG. | NOTES: |
|---|---|
| 19,58,87 | Apply Type 242 Blue Loctite. Torque To 30-35 In.-Lb. |
| 50 | Press Flush To Bottom Of Bore (1.845 Deep). |
| 85 | Apply Type 242 Blue Loctite and Torque To 130-140 In.-Lb. |

| FIG. | LUBRICATION |
|---|---|
| 49 | 2-1/2 Oz. Type "K" Grease, No. 49-08-4161. |
| 80 | 1-1/2 Oz. Type "K" Grease, No. 49-08-4161. |
| 83 | 1 Oz. Type "K" Grease, No. 49-08-4161. |

Grease All Rubber Parts When Assembling .