SERVICE PARTS LIST

BULLETIN NO.
54-26-1800

SPECIFY CATALOG NO. AND SERIAL NO. WHEN ORDERING PARTS			REVISED BULLETIN	DATE
CORDLESS 1/2" IMPACT WRENCH				July 2003
CATALOG NO. 9079-20	STARTING SERIAL NO.	**241A**	WIRING INSTRUCTION **58-01-1830**	

EXAMPLE:
00 — 0
Component Parts (Small #) Are Included When Ordering The Assembly (Large #).

Replace the Gasket (37) whenever the tool is opened for servicing.

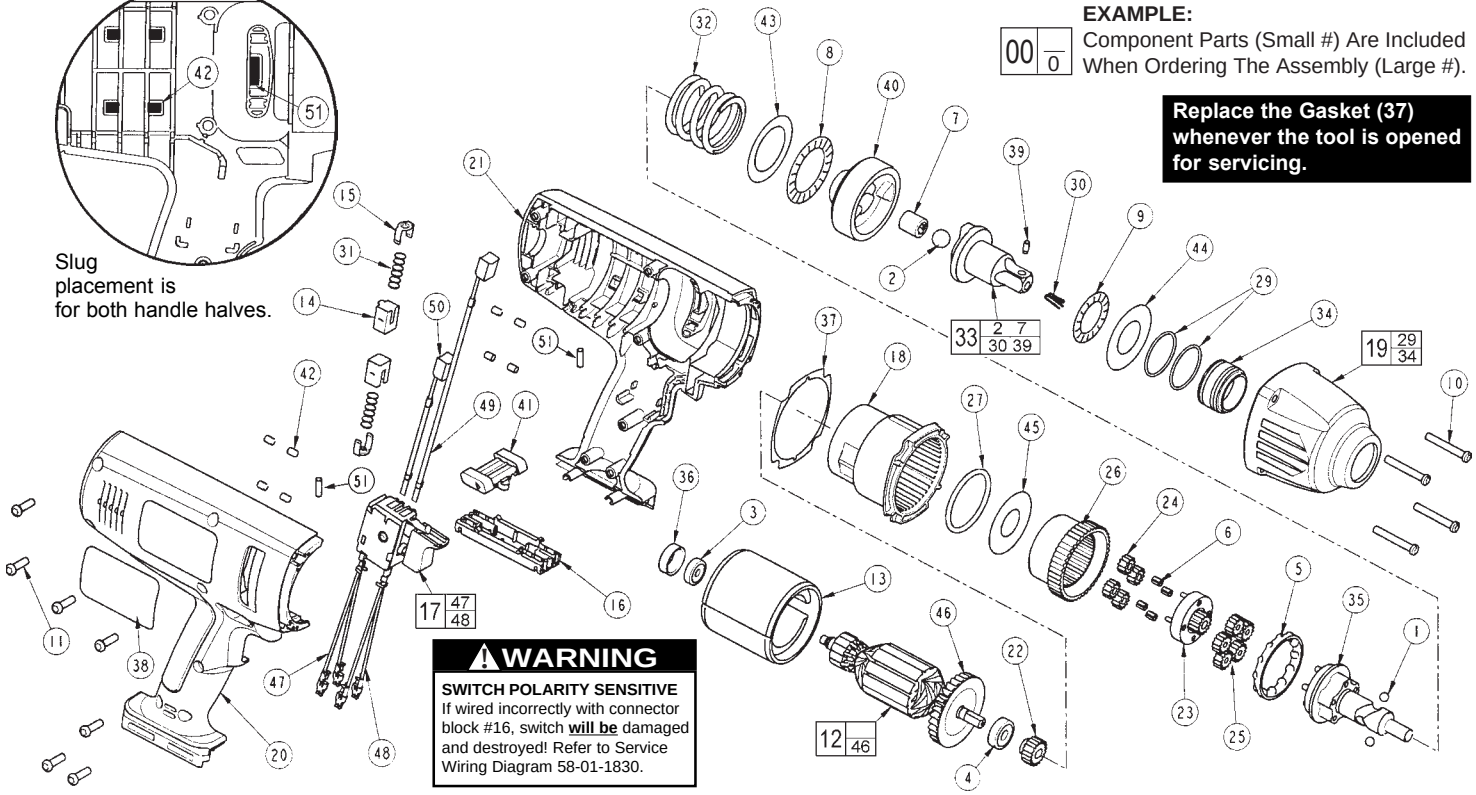

⚠ WARNING

SWITCH POLARITY SENSITIVE
If wired incorrectly with connector block #16, switch **will be** damaged and destroyed! Refer to Service Wiring Diagram 58-01-1830.

FIG.	PART NO.	DESCRIPTION OF PART	NO.REQ.
1	02-02-0250	1/4" Ball	(2)
2	----------	1/2" Ball	(1)
3	02-04-0645	Ball Bearing	(1)
4	02-04-0852	Ball Bearing	(1)
5	02-40-0050	Angular Contact Bearing	(1)
6	02-50-3260	Unit Cage Bearing	(4)
7	----------	Drawn Cup Bearing	(1)
8	02-80-0200	Thrust Bearing	(1)
9	02-80-3256	Thrust Bearing	(1)
10	05-88-5988	K50 x 35mm Screw	(4)
11	06-95-6290	M5 x 2.24 x 18 Plastite Screw	(7)
12	16-01-2100	Armature	(1)
13	18-01-2120	Field	(1)
14	22-20-0425	Brush Tube	(2)
15	22-32-0420	Brush Spring Clip	(2)
16	22-56-0200	Connector Block	(1)
17	23-66-0106	Switch Assembly	(1)
18	28-14-0175	Gearcase	(1)
19	14-38-0100	Front Housing Assembly	(1)
20	31-44-2186	Right Handle	(1)
21	31-44-2191	Left Handle	(1)
22	32-60-0170	Sun Gear	(1)
23	32-60-0185	Sun Gear	(1)
24	32-62-0210	Planet Gear	(4)
25	32-62-0215	Planet Gear	(5)
26	32-65-0005	Ring Gear	(1)
27	34-40-0070	O-Ring	(1)
29	----------	O-Ring	(2)
30	40-50-8320	Detent Spring	(1)
31	40-50-9079	Spring	(2)
32	40-50-0241	Spring	(1)
33	14-73-0145	Anvil Assembly	(1)
34	----------	Bushing	(1)
35	14-73-0300	Cam Shaft Assembly	(1)
36	42-96-0015	Bearing Cup	(1)
37	43-44-0991	Gasket	(1)
38	12-20-9079	Service Nameplate Kit	(1)
39	44-60-1170	Detent Pin	(1)
40	44-82-0205	Ram	(1)
41	45-24-0510	Reversing Shuttle	(1)
42	45-30-0021	Rubber Slug	(8)
43	45-88-0535	Washer	(1)
44	45-88-1575	Washer	(1)
45	45-88-3250	Washer	(1)
46	22-84-0375	Fan	(1)
47	23-94-3020	Leadwire Assembly-Black	(1)
48	23-94-3010	Leadwire Assembly-White	(1)
49	22-18-2080	Brush Assembly-Red	(1)
50	22-18-1980	Brush Assembly-Black	(1)
51	45-30-0025	Rubber Slug	(2)

FIG.	NOTES:
3	Orient bearing seal (black side) toward the commutator.
10	Torque to 45-50 in./lbs.
11	Torque to 25-30 in./lbs.
49,50	At the time of brush replacement, the tool should be relubricated with Type "Z" Grease, No.49-08-7655.

FIG.	LUBRICATION (Type "Z" Grease, No.49-08-7655):
19,26,34, 35,40	Lightly coat with grease the Ring Gear (26) and the Camshaft Planet Carrier bearing races (35). Lightly coat with grease the back bearing surface of the Ram (40) and the I.D. of the Front Housing Bushing (34).
7,33	Place a dab of grease in the Needle Bearing (7) inside the Anvil (33).
23,24,25,35	Fill with grease the center of the five Planet Gears (25) on the Camshaft Assembly (35). Fill the center of the four Planet Gears (24) on the Sun Gear (23).
40	Place approximately 1/4 oz. of grease in the front cavity of the Ram.
35	Place approximately 1/4 oz. grease on the Camshaft (35) inside the Spring (32).

MILWAUKEE ELECTRIC TOOL CORPORATION
13135 W. LISBON RD., BROOKFIELD, WI 53005