WIRING INSTRUCTIONS

TITLE **BAND SAW**

BULLETIN 58-01-0762

MILWAUKEE ELECTRIC TOOL CORP. 13135 WEST LISBON RD. BROOKFIELD, WIS.

DATE Apr. 2005

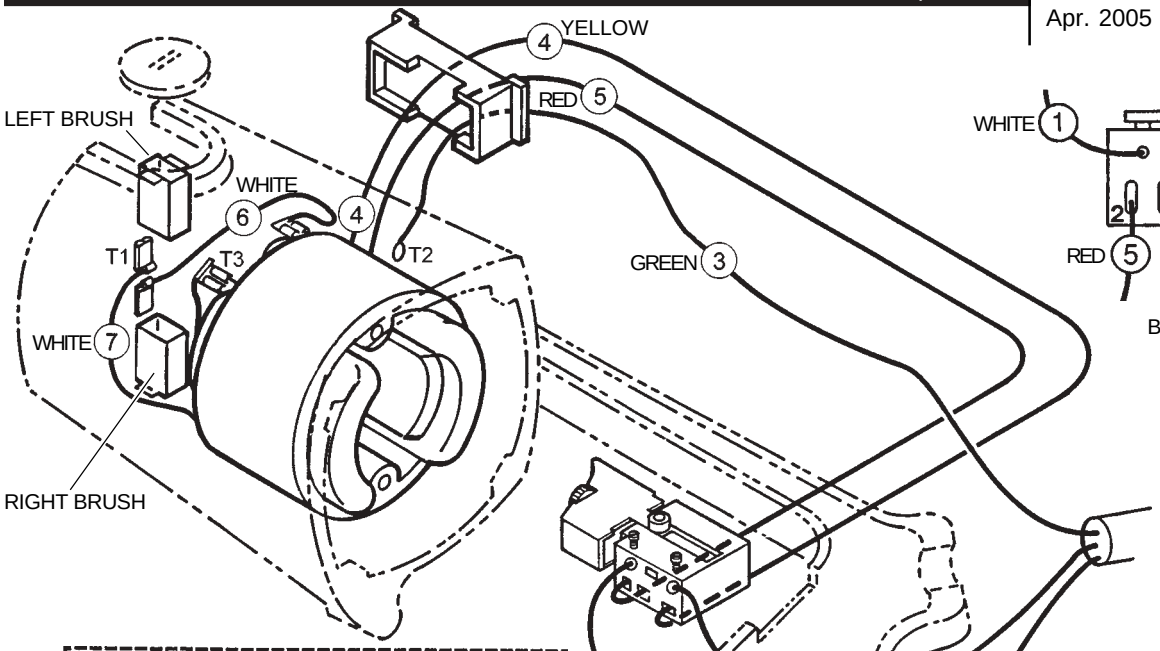

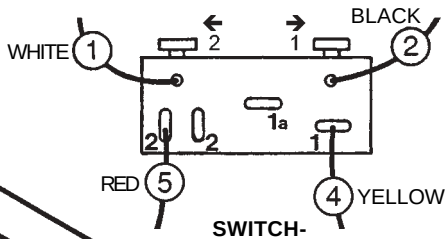

SWITCH-
BOTTOM VIEW

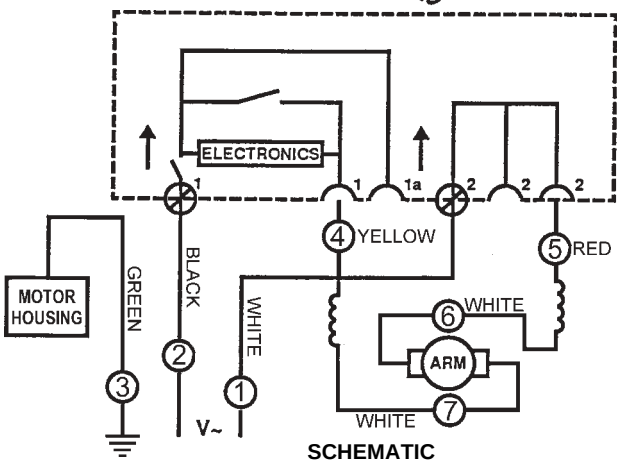

SCHEMATIC

FROM THE BOTTOM LEFT FIELD TERMINAL, ROUTE RED LEAD #5 ON TOP OF COIL IT CONNECTS TO, TOWARD YELLOW LEAD #4. HOLD WIRE #5 WITH INSULATOR 23-14-0020 AS IT CROSSES THE FIELD GAP. WIRES #4 AND #5 ARE TO EXIT MOTOR HOUSING INTO HANDLES TOGETHER.

CONNECT WHITE BRUSH LEAD #6 TO THE TOP LEFT FIELD TERMINAL. CONNECT WHITE BRUSH LEAD #7 TO THE BOTTOM RIGHT FIELD TERMINAL. ROUTE WIRES #6 AND #7 ON TOP OF COIL THEY CONNECT TO AND MAKE CONNECTIONS TO THE BRUSH TUBES.

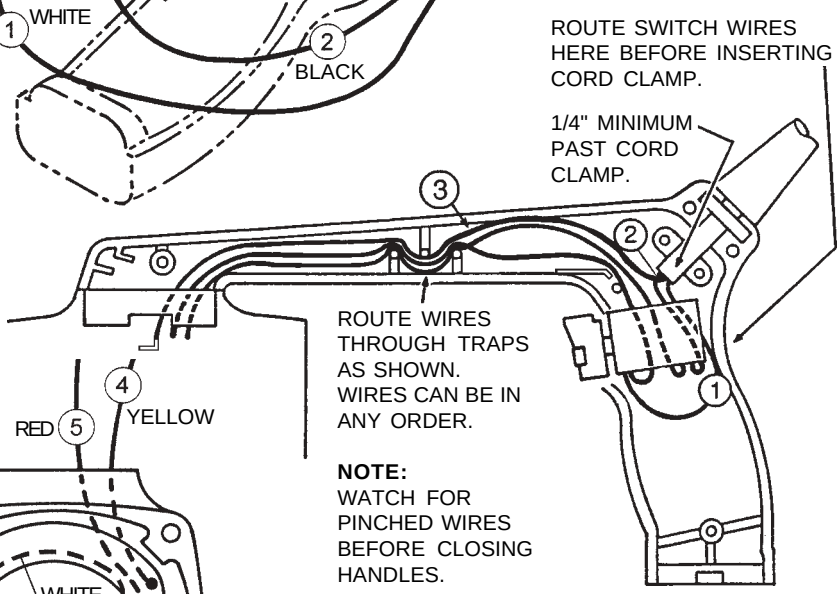

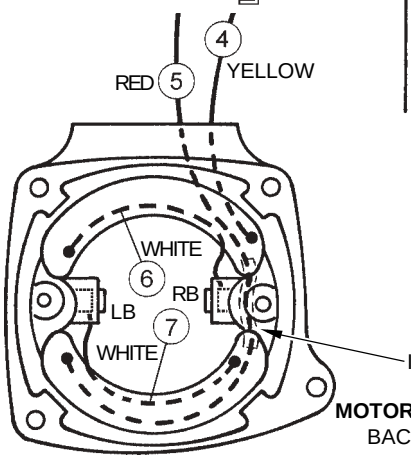

MOTOR HOUSING
BACK VIEW

WIRING SPECIFICATIONS				
Wire No.	Wire Color	Origin or Gauge	Length	Terminals, Connectors and 1 or 2 End Wire Preparation
1	White	Cord	4 1/2"	Component of cord assembly
2	Black	Cord	4 1/2"	Component of cord assembly
3	Green	Cord	9 1/4"	Component of cord. Strip 3/16" For T1.
4	Yellow	18 Ga.	16 1/2"	23-94-0022. Strip 3/16" for T3. Strip 5/16" and tin if ferrule is damaged.
5	Red	18 Ga.	20 1/2"	23-94-0021. Strip 3/16" for T3. Strip 5/16" and tin if ferrule is damaged.
6	White	18 Ga.	4 1/8"	23-94-0020. Strip 3/16" for T1 and T3
7	White	18 Ga.	4 1/8"	23-94-0020. Strip 3/16" for T1 and T3

BULK LEAD WIRE - BULLETIN NO. 58-01-0003

NOTE:
All leads must be held to ± 1/8".
All lead lengths are before stripping.

TERMINAL DESCRIPTION		
Code	Part No.	Qnty.
T1	23-74-0900	2
T2	23-74-0841	1
T3	23-74-0045	4